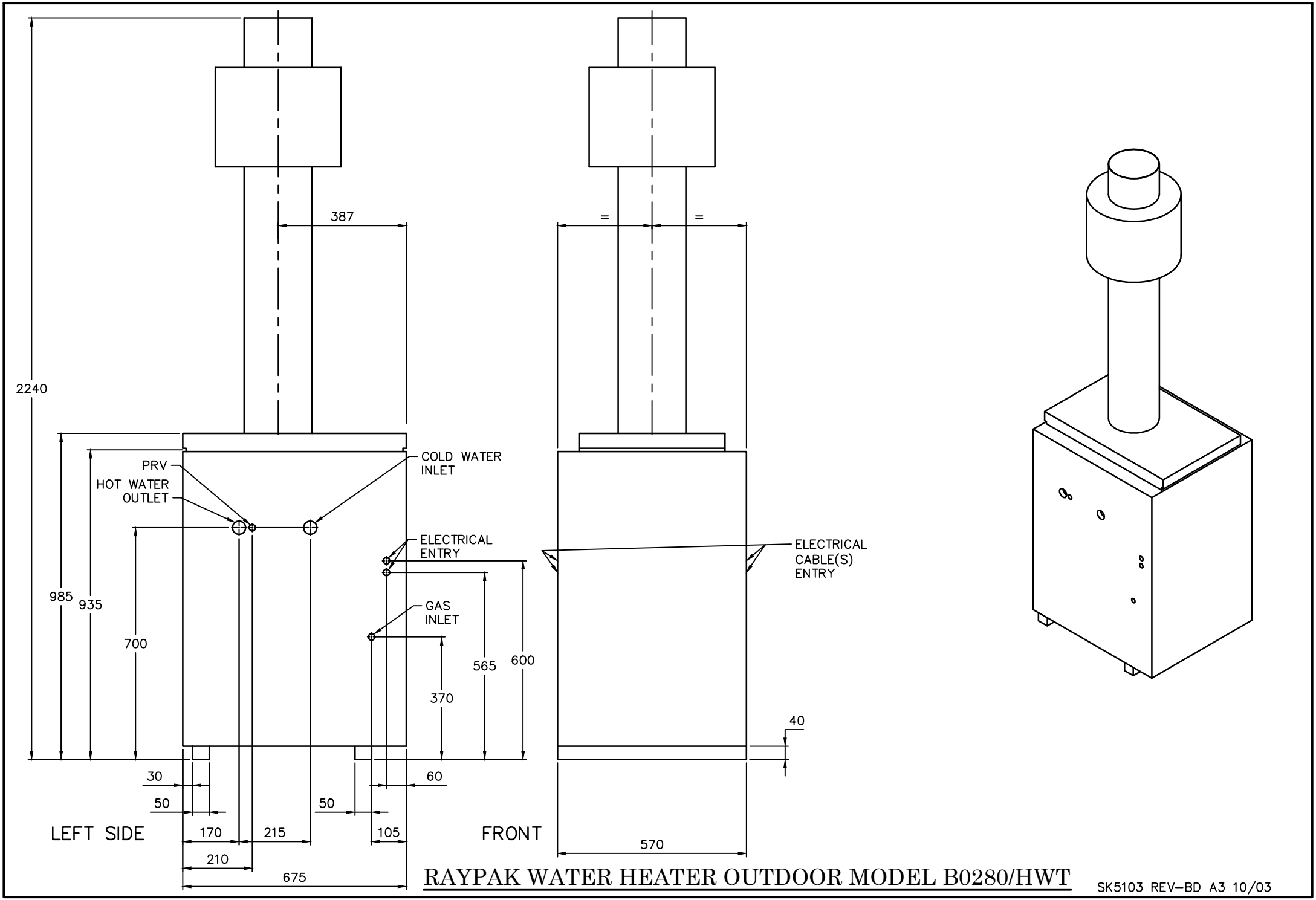
387
2240
PRV
HOT WATER OUTLET
COLD WATER INLET
ELECTRICAL ENTRY
GAS INLET
985
935
700
565
600
370
30
50
50
60
170
215
105
210
675
LEFT SIDE
=
=
ELECTRICAL CABLE(S) ENTRY
40
570
FRONT
RAYPAK WATER HEATER OUTDOOR MODEL B0280/HWT
SK5103 REV-BD A3 10/03