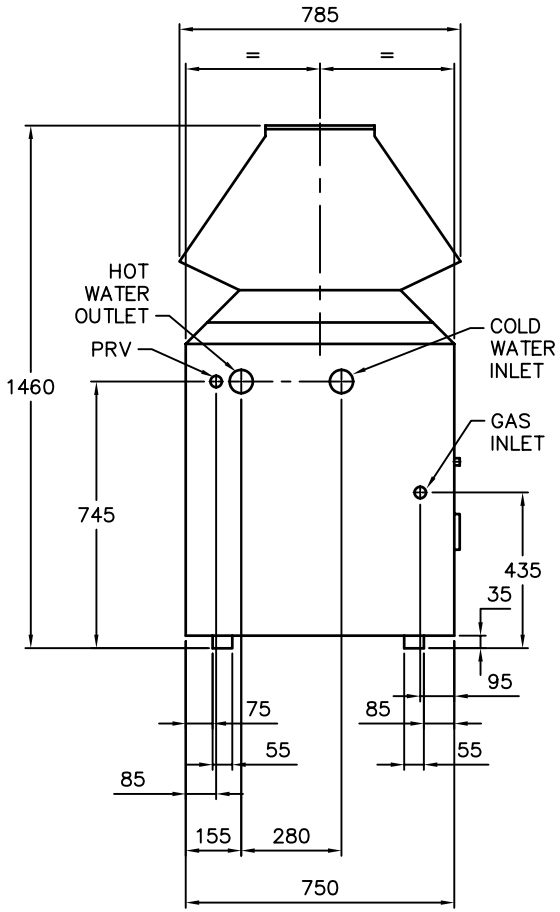

LEFT SIDE

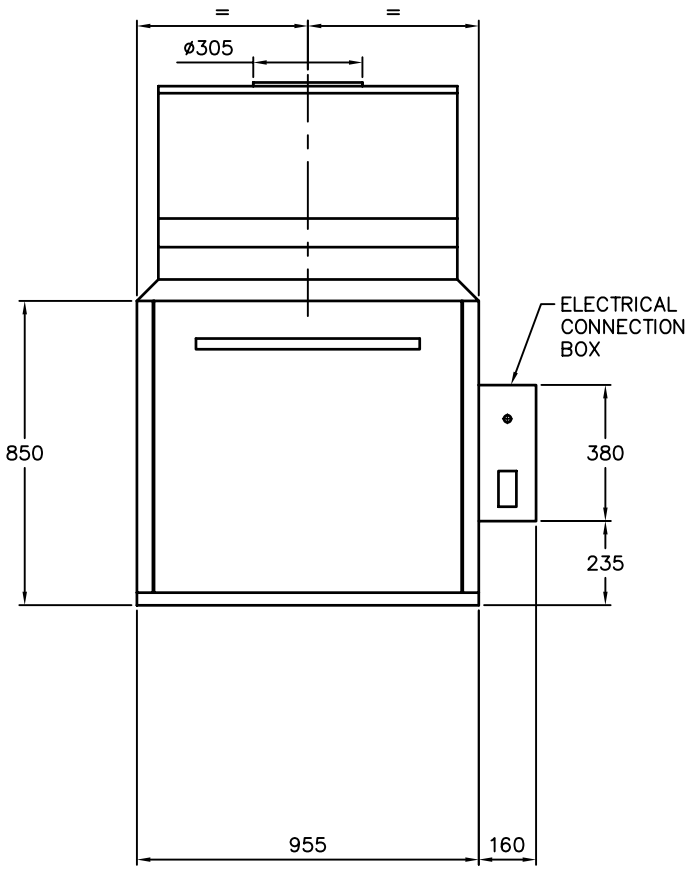

FRONT

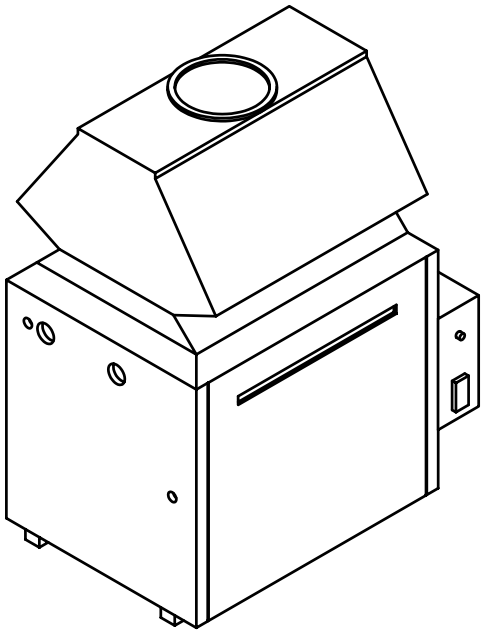

RAYPAK WATER HEATER INDOOR MODEL B0658/ID

SK5123 REV-BD A3 2/04 1:15

P:\DRAWING\SK\5\1\SK5123.dwg, 2/26/2004 4:11:38 PM, mlucia,